产 品 规 格 书

PRODUCT SPECIFICATION

B2D355-132A-AV81后倾离心风机

Backward centrifugal fan

（380/400V 50Hz）

客户号(Customer)：0000000000

版 本 (Edition)：A00

日 期 (Date)：2018.07.31

1.0 概述/ Introduction

本规格书主要描述了产品标准、使用环境、技术要求等.

This specification describes the standard 、operation environment、and technic requirements of the product。

2.0 产品标准和安规要求/Requirement of production standard and safety regulations

2.1本产品符合的标准 / The product satisfy requirements

2.1.1 GB12350《小功率电动机的安全要求》

GB12350《Safety requirments of small power motors》

2.1.2 GB/T13275《一般用途离心通风机通用技术条件要求》

GB/T13275 《General technical requirement for general centrifugal fan》

2.2.3 EN60335-1《家电和类似用途电器的安全要求》

EN60335-1 《Household and similar electrical appliances-safety》

2.2 本产品通过 CCC、CE认证

The fan has CCC、CE certificate

2.3 本产品全部材料符合RoHS要求

All material accord with RoHS.

3.0 机械要求/ Mechanical requirements

3.1外形图/Dimension drawing

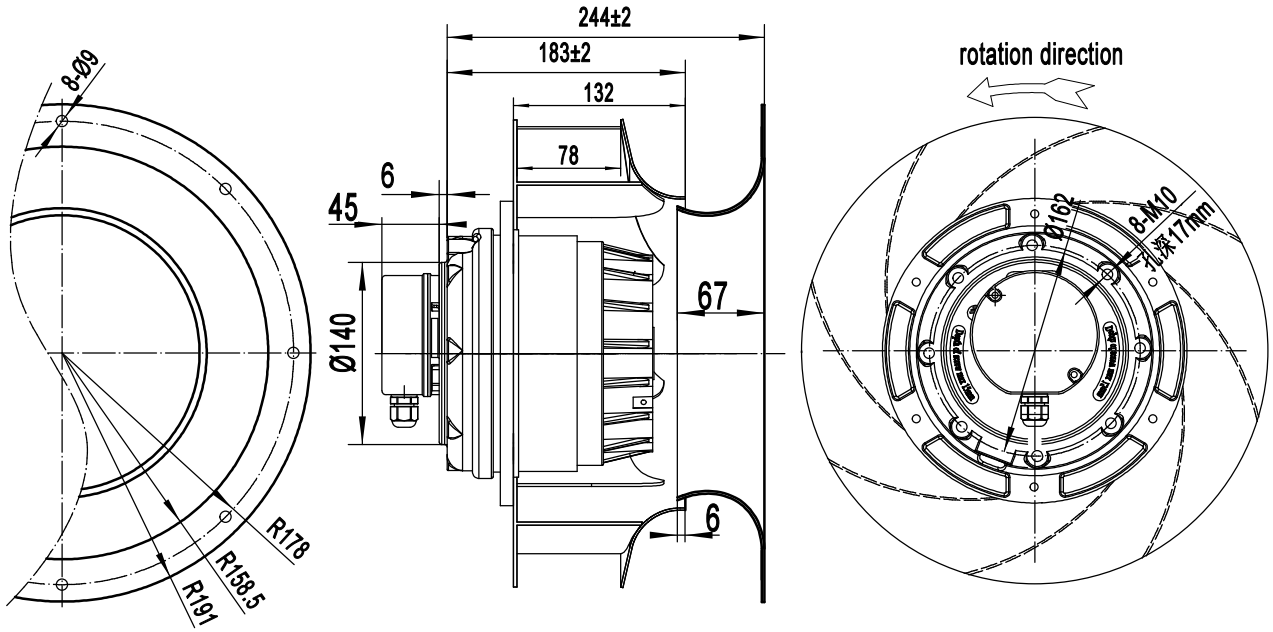

3.2 材质/Material

风轮铝镁合金,转子铸铝

Impeller material:AL5052, Rotor: Aluminum Casting

3.3 电机/Motor

外转子交流电机/ External rotor AC motor

3.4 轴承

免维护滚珠球轴承/ Maintenance free ball berings

3.5 平衡/ Balancing

风机在额定电压和频率下运转时，每个端面动平衡精度不低于G6.3，符合标准JB/T9101 。

At the rated voltage and frequency,,the residual unbalance of the fan is not less than G6.3 (balancing precision grade) in each plane,according with JB/T9101。

3.6 振动/Vibration of the fan

风机振动速度有效值按照JB/T8689标准规定。

Vibration speed virtual value of fans accord with JB/T8689。

3.7 跳动/ Runout of impeller

风轮轴向、径向跳动 ≤1.0mm。

Runout of impeller in axial and radial direction≤1.0mm。

3.8 寿命/Life time

风机寿命估算值30000小时，（在额定电压、环境温度为20℃、风机全速运转时）

Fan life expectance 30000 hours, determined when at nominal supply voltage,running at full speed, environment temperature of 20 ℃。

4.0 风机性能/Fan performance

4.1 性能参数/Performance data

	Voltage	Frequency	Current	Input Power	Speed	Capacitor	Air Flow	Noise	Operating Temperature	Curve No.	Approvals
Model No.	V	Hz	A	W	rpm	μF	m^3/h/CFM	dB(A)	Min / Max(℃)	#	
B2D355-132A-AV81	380/400	50	2.6	1600	2700		4500/2647	90	-30 / +60	①	CCC ,CE,RoHS

4.2 特性曲线/Performance curve

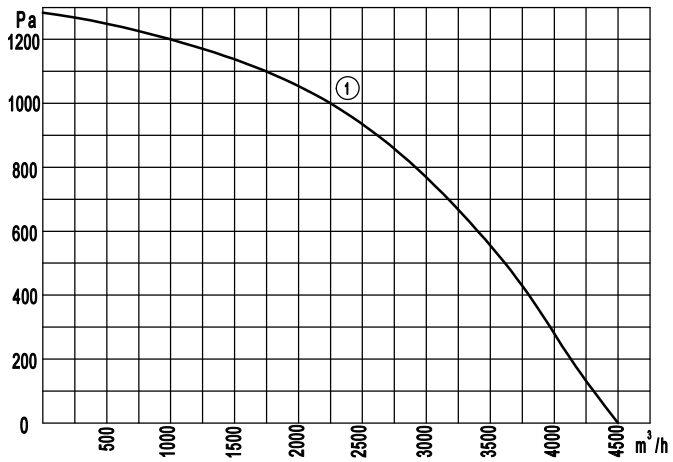

5.0电气性能/Electrical performance

5.1铭牌/Label

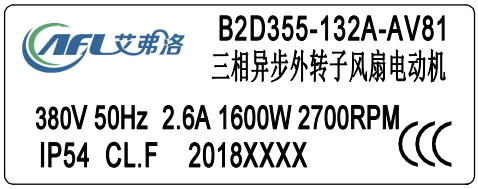

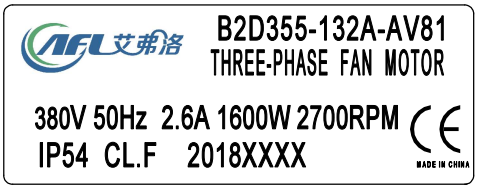

5.2接线图/Wiring diagram

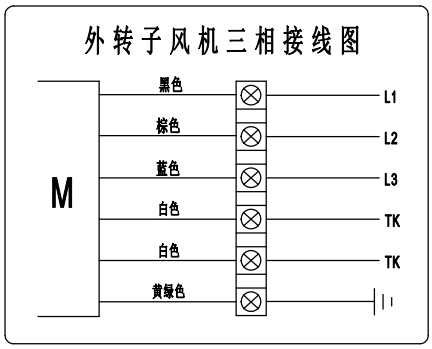

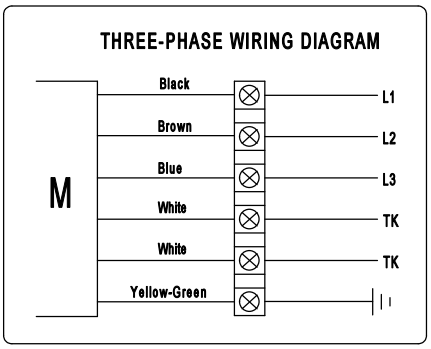

5.3 电压范围/Voltage range

风机设计的额定运行电压为380V，可运行的电压范围是360～420V，

The fan is designed to operate at a nominal voltage of 380V but can be operated in the AC supply voltage range of 360 to 420 V.

5.4 保护/Protection

电机有热保护功能, 断开温度:150—160℃,复位温度:100—130℃

This motor with heat protection,cut off temperature: 150—160℃,replacement temperature 100—130℃

5.5 防护等级/Type of protection

风机的防护等级为IP54。

Type of protection is IP54。

5.6 绝缘等级：F

Insulation Class: F

6.0质量要求/Quality requests

质量要求符合ISO9001:2000 / Quality requests accord with ISO9001:2000

质量要求符合企业标准 / Quality requests accord with AFL standard

7.0 使用和存储环境/ Operating and storaging environment requirements

7.1 使用环境/ Operating environment requirements

使用温度范围/Operating temperatures from：-30℃～+60℃

使用湿度范围/Operating humidity from: 0%～95% RH

海拔高度/The altitude：≤1000m

7.2 贮存环境/Storaging environment requirements

贮存温度范围：-40℃～+80℃ , 贮存湿度范围: 0%～75% RH。

Storaging temperatures from -40℃ to +80℃; Storaging humidity from 0% to 75% RH。

8.0 包装和标识/ Packaging and marks

8.1 包装/Packaging

纸箱包装/Carton packaging

8.2 标识/Marks

制造商名称、产品型号、重量、尺寸等

Markings: Name of manufacturer, type of fan, date of manufacture, weight,Size etc.

9.0 附件/Other requirements on accessory

9.1 电容/Capacitor

□带/Yes, ■不带/No, □根据销售订单配备/For Salers'request;

9.2 连接件要求/Annectent parts

端子/terminal(□有/Yes、■没有//No)